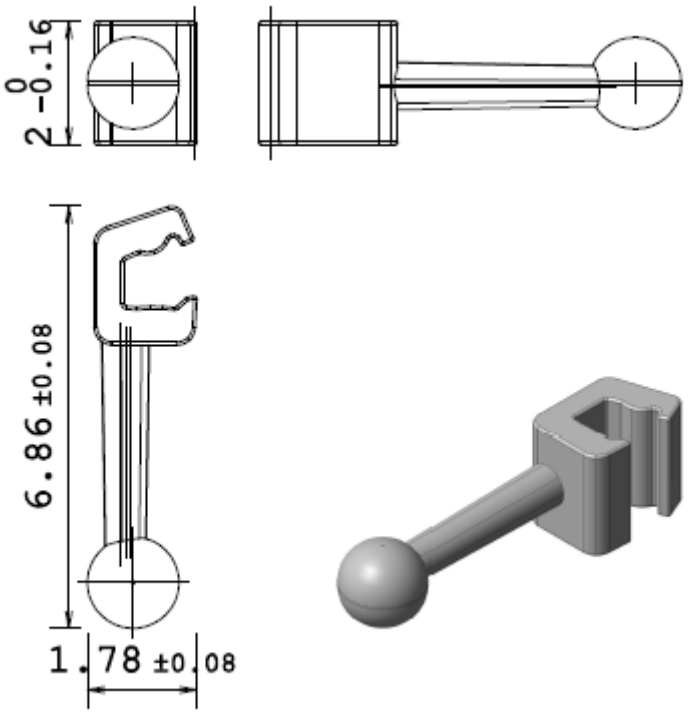
2 -0.16 0
6.86 ±0.08
1.78 ±0.08